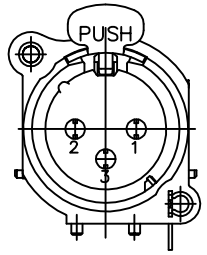

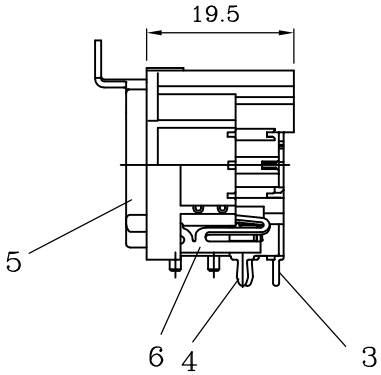

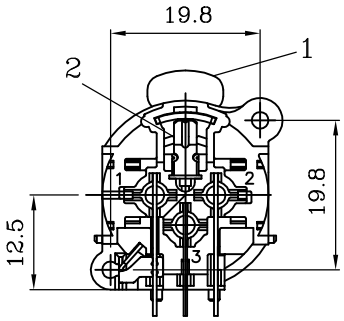

PCB-Layout (component side)

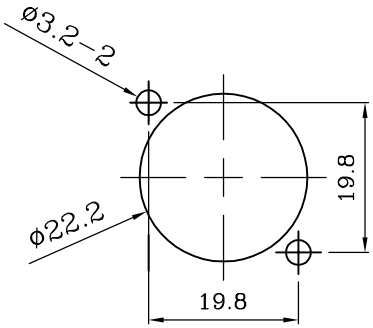

Panel cut out (rear side)

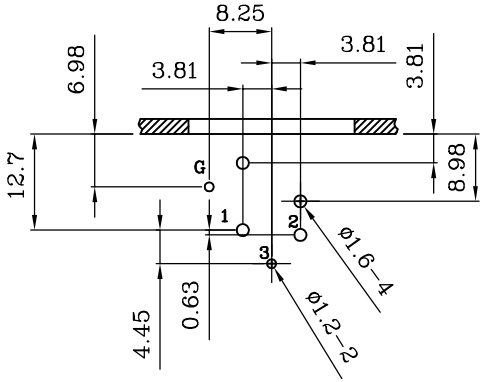

Layout tolerance: ±0.05mm [0.002"]

Specification
Contact resistance:<5mΩ
Insulation resistance:1GΩ
Dielectric strength:1500Vdc
Insertion/withdrawal force:<20N
Life time(mating cycles):>1000
Temperature range:-30°C TO +80°C

	Description	Qty.
6	DAC-F 地線/接PIN 1	1
5	DAC-3F 圓型塑膠母座	1
4	DAC 1.2號PIN/90度/鍍金&鍍銀	2
3	DAC-F PIN/90度 3號PIN/鍍金&鍍銀	1
2	DAC-F 彈片/SKD-5 熱處理	1
1	DAC-3F PUSH/鍍鎳	1

MODEL
DAC-3FAH /Push Lock/Right Angle PCB Mount

TITLE
DAC-3P XLR Female Chassis Connector

崧柏電子有限公司
SOUND PLUG ELECTRONIC CO;LTD.
Tel:886-6-3842328 Fax:886-6-3842356