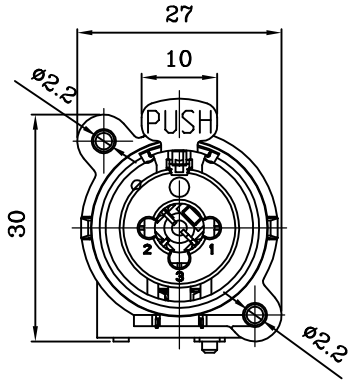

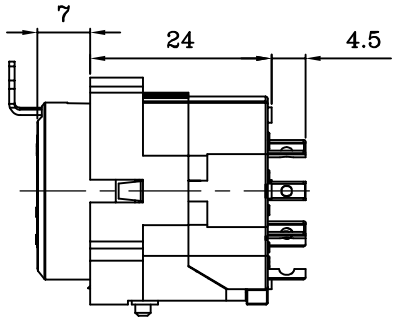

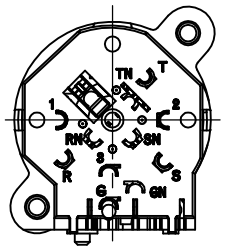

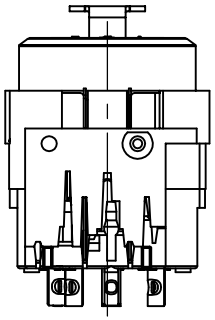

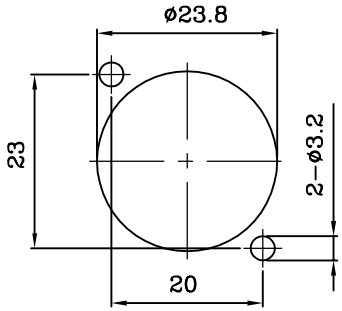

Panel cut out (front side)

NORMALLING-SCHEMES

Part No.	6.4 Phone Jack	XLR
DACC-J63SVAPST	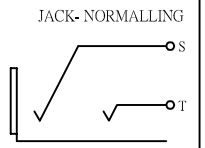	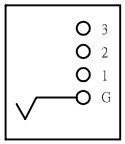
DACC-J63SVAP	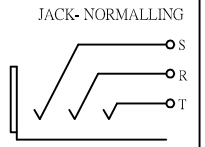	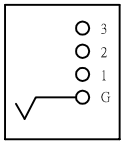
DACC-J63SVAPSN	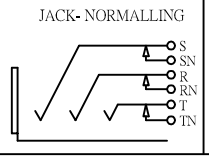	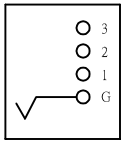

	Description	Qty.
9	GROUND/P.B.S./Ag	1
8	SPRING/SK7/Ni	1
7	PUSH/SK7/Ni	1
6	XLR CONTACT/P.B.S/Au	3
5	RING/P.B.S./Ag	1
4	TIP/P.B.S./Ag	1
3	SLEEVE/P.B.S./Ag	1
2	BACK COVER/NYLON/BLACK	1
1	BODY/NYLON/BLACK	1

MODEL DACC-J63SVAP/6.4MM PHONE & XLR JACK

TITLE

崧柏電子有限公司
SOUND PLUG ELECTRONIC CO;LTD.
Tel:886-6-3842328 Fax:886-6-3842356