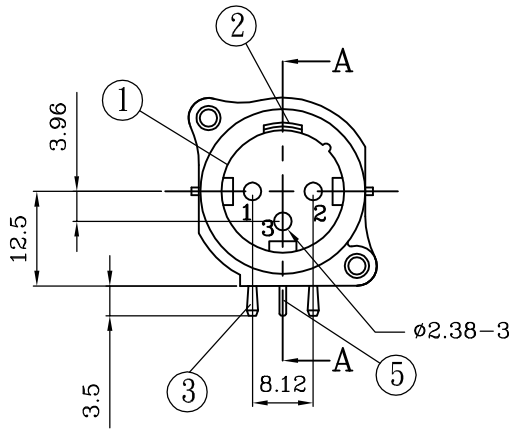

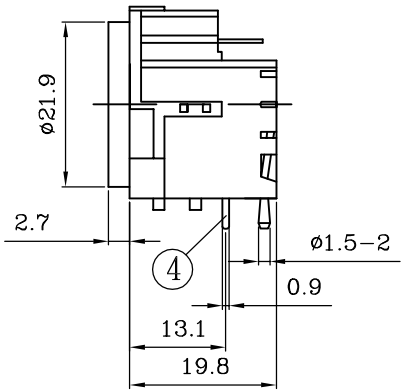

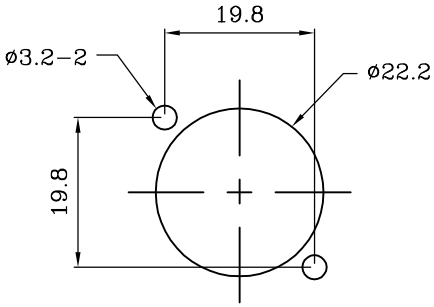

PANEL CUT OUT
(FRONT SIDE)

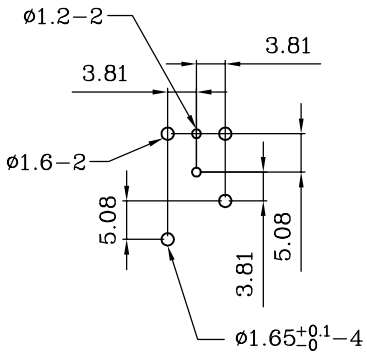

P.C.B LAYOUT (±0.2)
(BOTTOM VIEW)

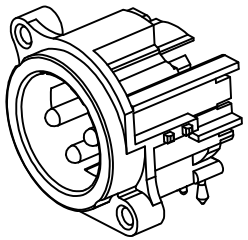

Specification
Contact resistance:<5mΩ
Insulation resistance:1GΩ
Delectric strength:1500Vdc
Insertion/withdrawal force:<20N
Life time(mating cycles):>1000
Temperature range:−30°C TO +80°C

	Description	Qty.
5	PIN 3/銅/鍍金	1
4	接地片/銅/鍍鎳	1
3	PIN 1&2/銅/鍍金	2
2	固定片/鐵/鍍鎳	1
1	Housing/PA66+30%GF/Black	1

MODEL
DAC-3MAH/DAC-3P XLR Male Chassis Connector

TITLE

崧柏電子有限公司
SOUND PLUG ELECTRONIC CO;LTD.
Tel:886-6-3842328 Fax:886-6-3842356